# .075 Centerline

INCON Inc.

5 Flagstone Drive  Hudson, New Hampshire  03051
Phone 603-595-0550  Fax 603-595-0555  Email: techsupport@inconconnector.com
Web Address:  www.InconConnector.com

# Contents

*Series*
*075 P.C. Board & Cable Connectors*

Page


A1 Specifications

A2 Performance

**2 Row Connectors**

A3 Straight and Right Angle Receptacle **AAD,ACD / ACT,ACV** 10 thru 100 positions

A4 Straight Plug **AAF & ACF** 10 thru 100 positions

A5 Right Angle Plug **AAE,ABA,ACE,** 10 thru 100 positions

A6 2 Row Contact Codes

A7 2 and 3 Row Hardware Codes

A8 2, 3, and 4 Row Hardware Polarization Codes

**3 Row Connectors**

A9 Straight Plug or Receptacle **AAC,ACC,AAA,ACA** 80, 122, 152, & 206 positions
Right Angle Receptacle **ACP** 80, 122, 152, & 206 positions

A10 Right Angle Receptacle, Low Profile **ABM**, 122 position

A11 Right Angle Plug **AAB & ACB**, 80, 122, 152, & 206 positions

A12 3 Row Contact Codes

3 Row Hardware Codes see pages 7 & 8

**4 Row Connectors**

A13 Straight Plug or Receptacle **AAH,ACH,AAK,ACK** 210 positions

A14 Right Angle Plug **AAJ & ACJ**, 210 positions

A15 Right Angle Receptacle **ACL**, 210 positions

A16 Right Angle Receptacle **ACU**, 210 positions

A17 4 Row Contact Codes

A18 4 Row Hardware Codes (see page 8 for Polarization Codes)

A19 3 and 4 Row Interfacial Silicone Rubber Gaskets

A20 Variation Codes

A21 MIL-C-55302 Cross Reference



INCON Inc.

5 Flagstone Drive Hudson, New Hampshire 03051
Phone 603-595-0550 Fax 603-595-0555 Email: techsupport@inconconnector.com
Web Address: www.InconConnector.com

# Specifications

*"F" Series .075" ℄*

## Material and Finish

| | |
|---|---|
| **Molded Insulator:** | *Glass Filled Polyphenylene Sulfide, Per MIL-M-24519, Type GST-40F.* |
| **Pin Contacts:** | *Copper Alloy per MIL-C-55302.* |
| **Socket Contacts:** | |
| Contacts: | *Be Cu per MIL-C-55302.* |
| Terminal: | *Copper Alloy per MIL-C-55302.* |
| **Contact Finish:** | *Gold Plate per MIL-G-45204. Localized finish per MIL-C-55302.* |
| **Hardware:** | *Stainless Steel per ASTM-A581 or A582. Passivated per QQ-P-35.* |
| Guide Sockets, Polarized | *Be Cu per ASTM-B196 or B197. Nickel Plated per QQ-N-290.* |
| Gasket | *Silicone Rubber per ZZ-R-765.* |
| **Tolerance:** | *Decimals ±.010, Angles ± 5° unless otherwise specified.* |
| **Connector Marking:** | *Marking shall meet the requirements of MIL-STD-1285 and MIL-STD-202 method 215 for permanency. Pin numbers indicating every fourth position are marked on the side of the connector.* |

# Performance

## "F" Series .075" ℄

| | |
|---|---|
| **Wire Size:** | #24 AWG Stranded |
| **Contact Rating:** | 3 ampere maximum per contact |
| **Solderability:** | Pretinning meets the requirements of MIL-STD-202, Method 208. |
| **Operating Temp:** | -65° to +125°C<br>-85° to +257°F |

| Test | Requirements | Test Method per MIL-STD-1344 |
|---|---|---|
| **Contact Resistance** | Will not exceed .020 ohms on individual contact pair with average not to exceed .010 ohms | #3004 |
| **Dielectric Withstanding** | 750 vrms, 60 Hz @ sea level<br>250 vrms, 60 Hz @ 70,000 feet | #3001 |
| **Insulation Resistance** | 5000 megohms minimum @ 500 VDC | #3003 |
| **Durability** | 500 connector mating cycles | MIL-C-55302 para. 4.7.9 |
| **Temperature Cycling** | 5 (1) hr cycles; -65° to +125°C | #1003 |
| **Vibration** | 10-20000 Hz, 15G Peak | #2005 |
| **Salt Spray** | 5% salt spray @ 95°F for 48 hours | #1001 |
| **Shock** | 100G sawtooth, 6ms | #2004 |
| **Humidity** | 10 days @ 25° to 65°C,<br>80-98% RH | #1002 |
| **Contact Engagement Low Force** | 4 oz. Maximum with a .0255 dia pin per MS3197-22-Y1 | #2014 & MIL-C-55302 |
| **Contact Separation Low Force** | .5 oz. Minimum with a .0245 dia pin per MS3197-22-X1 | #2014 & MIL-C-55302 |

INCON Inc.
5 Flagstone Drive Hudson, New Hampshire 03051
Phone 603-595-0550 Fax 603-595-0555 Email: techsupport@inconconnector.com
Web Address: www.InconConnector.com

# .075 SERIES 2 ROW STRAIGHT & RIGHT ANGLE RECEPTACLES

M55302 / 190

P/N AXX XXX AXXX AXXX AXX

- Body Style
- Number of Contacts
- Contact Code see page A6
- Hardware Code see pages A7-A8
- Variation see page A20

| Dimensions | | | | | |
|---|---|---|---|---|---|
| No. of Cnt's | "A" | "B" | "C" | "D" | "E" |
| 010 | 1.138 | .968 | .618 | .300 | .798 |
| 020 | 1.513 | 1.343 | .993 | .675 | 1.173 |
| 030 | 1.888 | 1.718 | 1.368 | 1.050 | 1.548 |
| 034 | 2.038 | 1.868 | 1.518 | 1.200 | 1.698 |
| 040 | 2.263 | 2.093 | 1.743 | 1.425 | 1.923 |
| 044 | 2.413 | 2.243 | 1.893 | 1.575 | 2.073 |
| 050 | 2.638 | 2.468 | 2.118 | 1.800 | 2.298 |
| 060 | 3.013 | 2.843 | 2.493 | 2.175 | 2.673 |
| 070 | 3.388 | 3.218 | 2.868 | 2.550 | 3.048 |
| 080 | 3.763 | 3.593 | 3.243 | 2.925 | 3.423 |
| 090 | 4.138 | 3.968 | 3.618 | 3.300 | 3.798 |
| 100 | 4.513 | 4.343 | 3.993 | 3.675 | 4.173 |

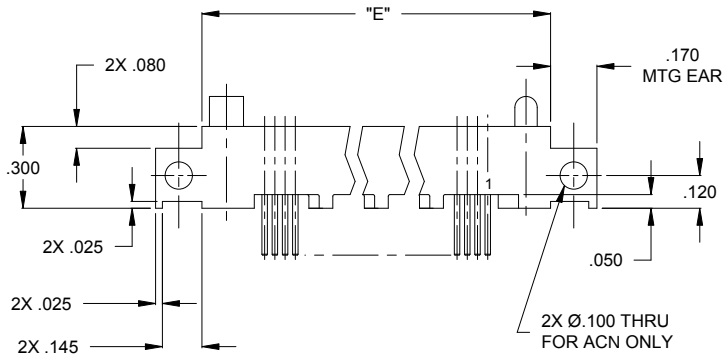


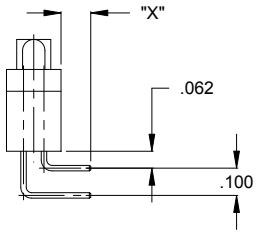


ACT & ACV
CARD EXTENDER

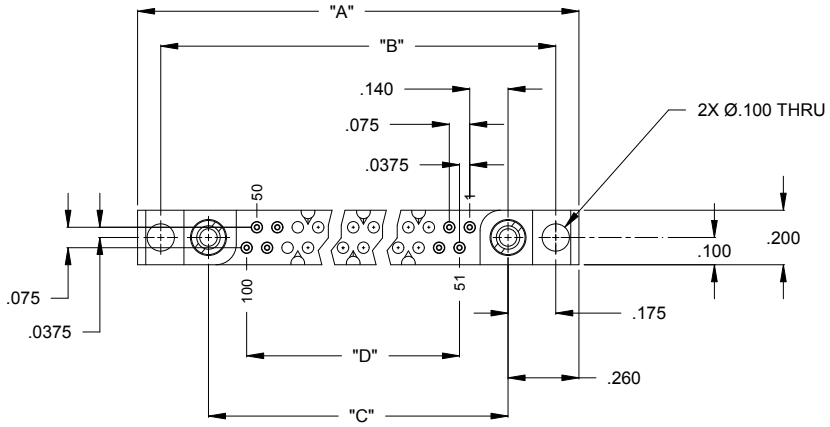


MATING CONNECTORS:

AAE, AAF. ACE
ACF, ABA

AAD - AS SHOWN WITH MTG EARS
ACD - WITHOUT MTG EARS
ACT - RIGHT ANGLE WITH MTG EARS
ACV - RIGHT ANGLE WITHOUT MTG EARS
ACN - RIGHT ANGLE WITH RIGHT MTG HOLES


INCON Inc.

5 Flagstone Drive Hudson, New Hampshire 03051
Phone 603-595-0550 Fax 603-595-0555 Email: techsupport@inconconnector.com
Web Address: www.InconConnector.com

# .075 SERIES 2 ROW STRAIGHT PLUG

| Dimensions | | | | | |
|---|---|---|---|---|---|
| No. of Cnt's | "A" | "B" | "C" | "D" | "E" |
| 010 | 1.138 | .968 | .618 | .300 | .798 |
| 020 | 1.513 | 1.343 | .993 | .675 | 1.173 |
| 030 | 1.888 | 1.718 | 1.368 | 1.050 | 1.548 |
| 034 | 2.038 | 1.868 | 1.518 | 1.200 | 1.698 |
| 040 | 2.263 | 2.093 | 1.743 | 1.425 | 1.923 |
| 044 | 2.413 | 2.243 | 1.893 | 1.575 | 2.073 |
| 050 | 2.638 | 2.468 | 2.118 | 1.800 | 2.298 |
| 060 | 3.013 | 2.843 | 2.493 | 2.175 | 2.673 |
| 070 | 3.388 | 3.218 | 2.868 | 2.550 | 3.048 |
| 080 | 3.763 | 3.593 | 3.243 | 2.925 | 3.423 |
| 090 | 4.138 | 3.968 | 3.618 | 3.300 | 3.798 |
| 100 | 4.513 | 4.343 | 3.993 | 3.675 | 4.173 |

P/N AXX XXX AXXX AXXX AXX

- Body Style
- Number of Contacts
- Contact Code see page A6
- Hardware Code see pages A7-A8
- Variation see page A20

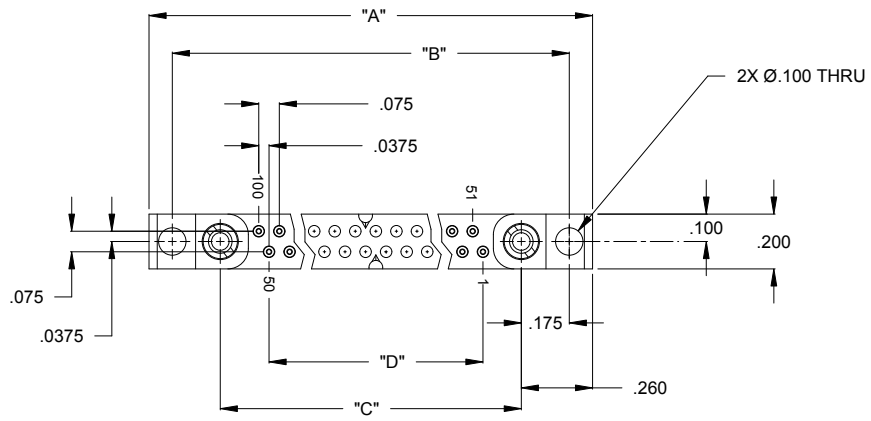


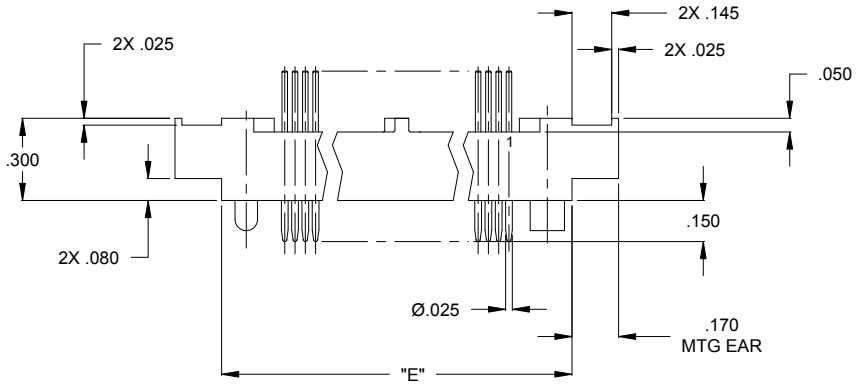


AAF - AS SHOWN WITH MTG EARS

ACF - WITHOUT MTG EARS

MATING CONNECTORS:

| |
|---|
| AAD |
| ACD |
| ACT |
| ACV |


INCON Inc.

5 Flagstone Drive Hudson, New Hampshire 03051
Phone 603-595-0550 Fax 603-595-0555 Email: techsupport@inconconnector.com
Web Address: www.InconConnector.com

# .075 SERIES 2 ROW RIGHT ANGLE PLUG

M55302 / 191

P/N AXX XXX AXXX AXXX AXX

- AXX — Body Style
- XXX — Number of Contacts
- AXXX — Contact Code see page A6
- AXXX — Hardware Code see pages A7-A8
- AXX — Variation see page A20

| Dimensions | | | | | |
|---|---|---|---|---|---|
| No. of Cnt's | "A" | "B" | "C" | "D" | "E" |
| 010 | 1.138 | .968 | .618 | .300 | .798 |
| 020 | 1.513 | 1.343 | .993 | .675 | 1.173 |
| 030 | 1.888 | 1.718 | 1.368 | 1.050 | 1.548 |
| 034 | 2.038 | 1.868 | 1.518 | 1.200 | 1.698 |
| 040 | 2.263 | 2.093 | 1.743 | 1.425 | 1.923 |
| 044 | 2.413 | 2.243 | 1.893 | 1.575 | 2.073 |
| 050 | 2.638 | 2.468 | 2.118 | 1.800 | 2.298 |
| 060 | 3.013 | 2.843 | 2.493 | 2.175 | 2.673 |
| 070 | 3.388 | 3.218 | 2.868 | 2.550 | 3.048 |
| 080 | 3.763 | 3.593 | 3.243 | 2.925 | 3.423 |
| 090 | 4.138 | 3.968 | 3.618 | 3.300 | 3.798 |
| 100 | 4.513 | 4.343 | 3.993 | 3.675 | 4.173 |

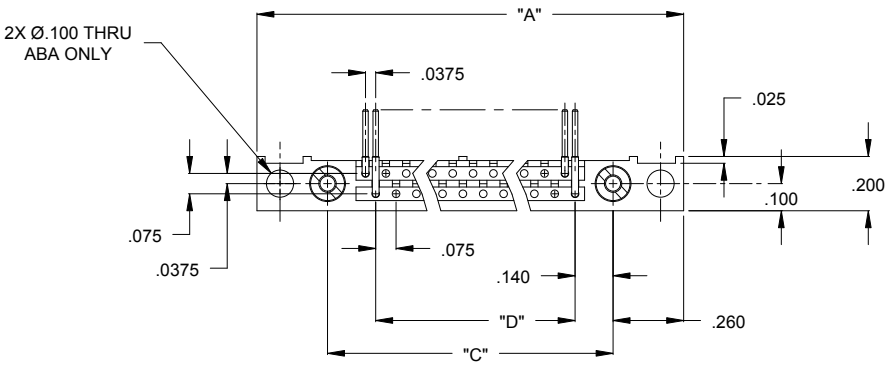


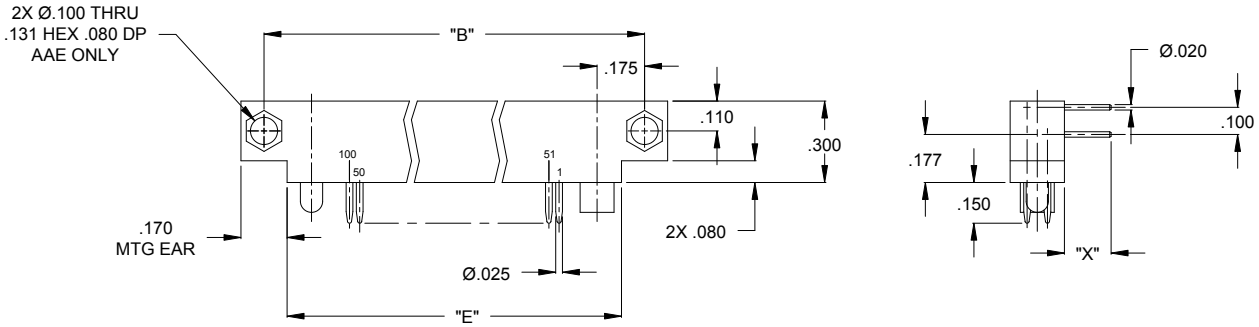


MATING CONNECTORS:

AAD
ACD
ACT
ACV

AAE - AS SHOWN WITH MTG EARS
ABA - SAME AS AAE EXCEPT W/VERTICAL MTG HOLES
ACE - WITHOUT MTG EARS


INCON Inc.

5 Flagstone Drive Hudson, New Hampshire 03051
Phone 603-595-0550 Fax 603-595-0555 Email: techsupport@inconconnector.com
Web Address: www.InconConnector.com

# .075 SERIES 2 ROW CONTACT CODES

## RECEPTACLE

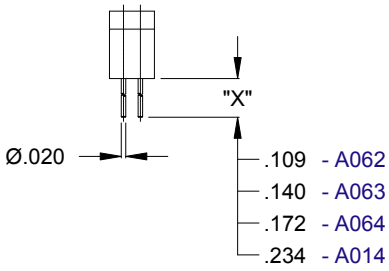


SOLDER DIP

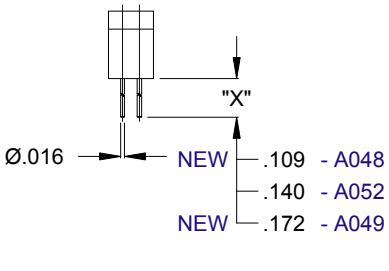


SOLDER DIP

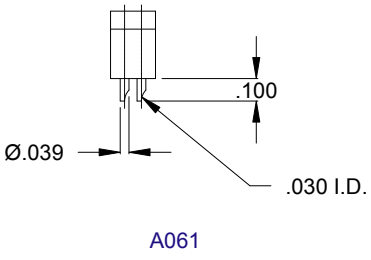


A061

SOLDER CUP

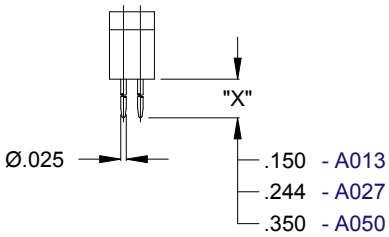


PLUG TERMINATION

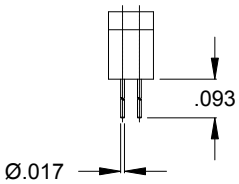


A065

FLEX TERMINATION

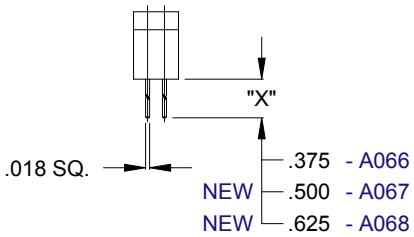


WIRE WRAP

## PLUG

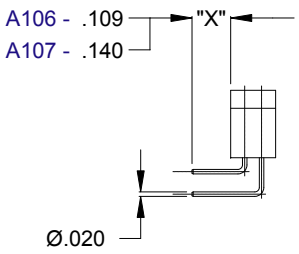


RT ANGLE RECEPTACLE
LOAD & BEND
SOLDER DIP

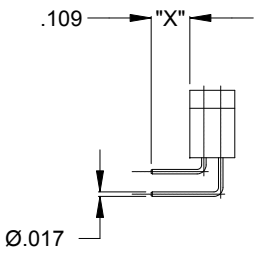


A114

RT ANGLE RECEPTACLE
LOAD & BEND
SOLDER DIP

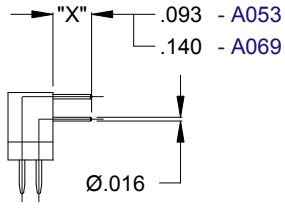


RT ANGLE PLUG
FLEX

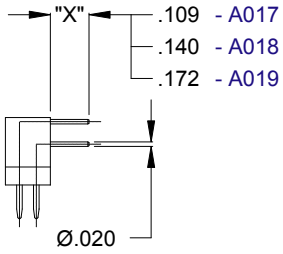


RT ANGLE PLUG
SOLDER DIP

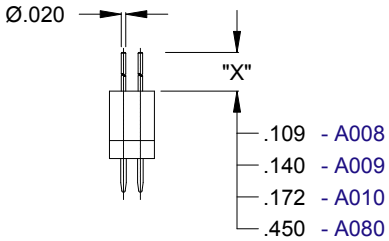


SOLDER DIP

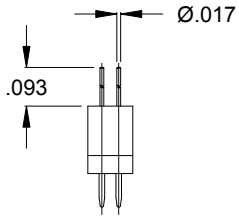


A083

FLEX TERMINATION

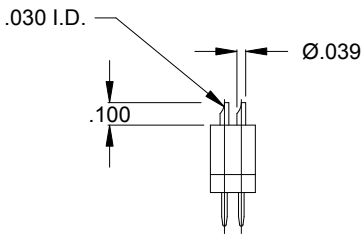


A011

SOLDER CUP


INCON Inc.

5 Flagstone Drive Hudson, New Hampshire 03051
Phone 603-595-0550 Fax 603-595-0555 Email: techsupport@inconconnector.com
Web Address: www.InconConnector.com

# .075 SERIES 2 & 3 ROW HARDWARE CODES

## GUIDE SETS

A003 - GUIDE SET
FIGURE #1

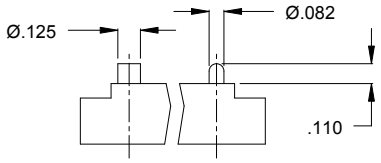


A025 - LONG GUIDE SET
FIGURE #2

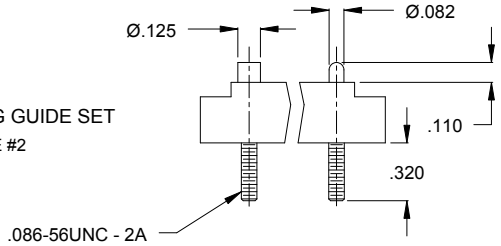


| CODE | MIL CODE | FIG NO. | HARDWARE DESCRIPTION | MIL APPROVED |
|---|---|---|---|---|
| A000 | | | NO HARDWARE | |
| A003 | X | 1 | GUIDE SET | YES |
| A024 | | 1 | GUIDE SET REVERSED | NO |
| A025 | | 2 | LONG GUIDE SET | NO |
| A029 | | 1 | TWO GUIDE PINS | NO |
| A030 | | 1 | TWO GUIDE SOCKETS | NO |

## TURNING HEX JACKSETS

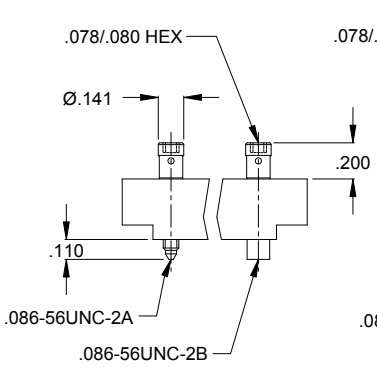


A009 - SHORT TURNING HEX JACKSET
FIGURE #1

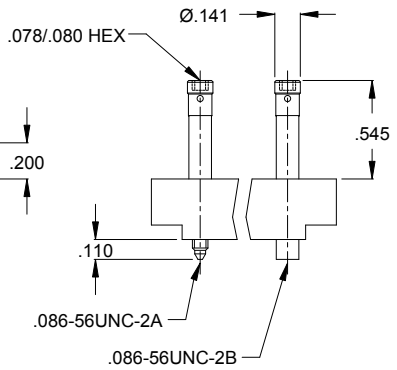


A014 - TURNING HEX JACKSET
FIGURE #2

| CODE | MIL CODE | FIG NO. | HARDWARE DESCRIPTION | KNOB LENGTH | MIL APP'D |
|---|---|---|---|---|---|
| A000 | | | NO HARDWARE | | |
| A009 | S | 1 | SHORT TURNING HEX JACKSET | .200 | YES |
| A012 | | | SHORT TURNING JACKSET, REVERSED | .200 | NO |
| A014 | N | 2 | TURNING HEX JACKSET | .545 | YES |
| A015 | | | TURNING HEX JACKSET, REVERSED | .545 | NO |
| A032 | | | SHORT TURNING HEX JACKSCREWS (2) | .200 | NO |

## FIXED JACKSETS

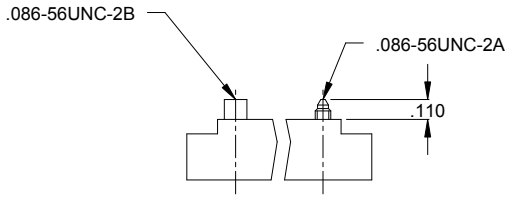


A010 - FIXED JACKSET
FIGURE #1

| CODE | MIL CODE | FIG NO. | HARDWARE DESCRIPTION | MIL APPROVED |
|---|---|---|---|---|
| A000 | | | NO HARDWARE | |
| A002 | | 1 | FIXED JACKSET REVERSED | NO |
| A010 | F | 1 | FIXED JACKSET | YES |
| A023 | | 1 | TWO FIXED JACKSOCKETS | NO |
| A040 | | 1 | TWO FIXED JACKSCREWS | NO |

## SLOTTED TURNING JACKSETS

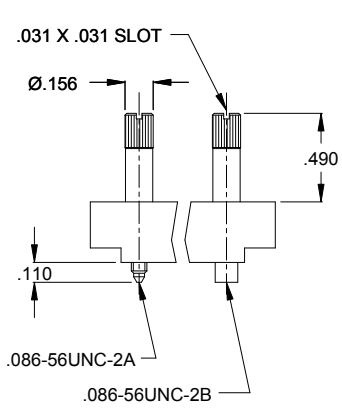


A001 - TURNING SLOTTED JACKSET
FIGURE #1

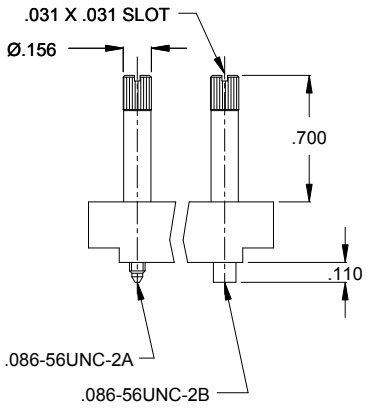


A014 - TURNING SLOTTED JACKSET
FIGURE #2

| CODE | MIL CODE | FIG NO. | HARDWARE DESCRIPTION | KNOB LENGTH | MIL APP'D |
|---|---|---|---|---|---|
| A000 | | | NO HARDWARE | | |
| A001 | M | 1 | TURNING SLOTTED JACKSET | .490 | |
| A007 | | 2 | TURNING SLOTTED JACKSET, REVERSED | .700 | |
| A011 | L | 2 | TURNING SLOTTED JACKSET | .700 | |
| A013 | | 1 | TURNING SLOTTED JACKSET, REVERSED | .490 | |
| A034 | | 1 | TURNING SLOTTED JACKSCREWS (2) | .490 | |
| A038 | | 1 | TURNING SLOTTED JACKSOCKETS (2) | .490 | |

INCON Inc.
5 Flagstone Drive Hudson, New Hampshire 03051
Phone 603-595-0550 Fax 603-595-0555 Email: techsupport@inconconnector.com
Web Address: www.InconConnector.com

# .075 SERIES HARDWARE POLARIZATION CODES

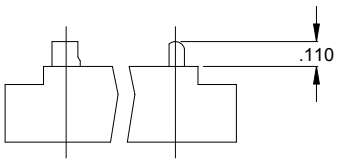


2 / 3 ROW POLARIZATION CODE

P2XX - GUIDE SET POLARIZED FOR PLUG

R2XX - GUIDE SET POLARIZED FOR RECEPTACLE

SEE POLARIZATION CONFIGURATION CHART BELOW FOR POLARIZATION CODE

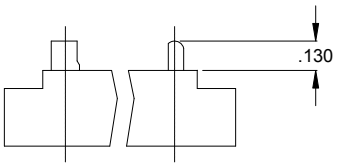


4 ROW POLARIZATION CODE

P1XX - GUIDE SET POLARIZED FOR PLUG

R1XX - GUIDE SET POLARIZED FOR RECEPTACLE

SEE POLARIZATION CONFIGURATION CHART BELOW FOR POLARIZATION CODE

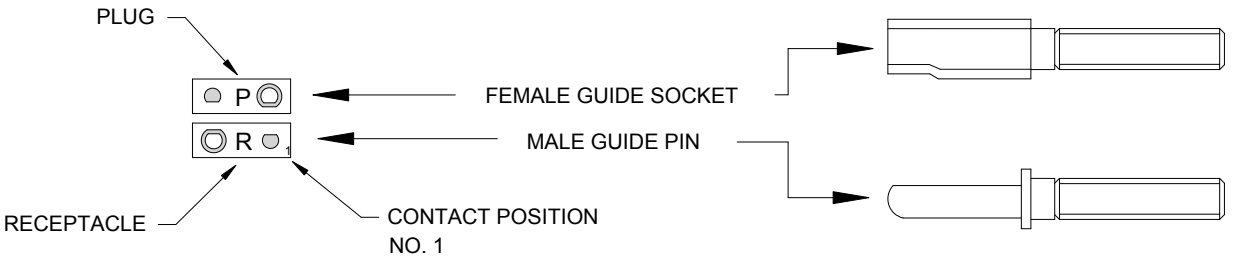


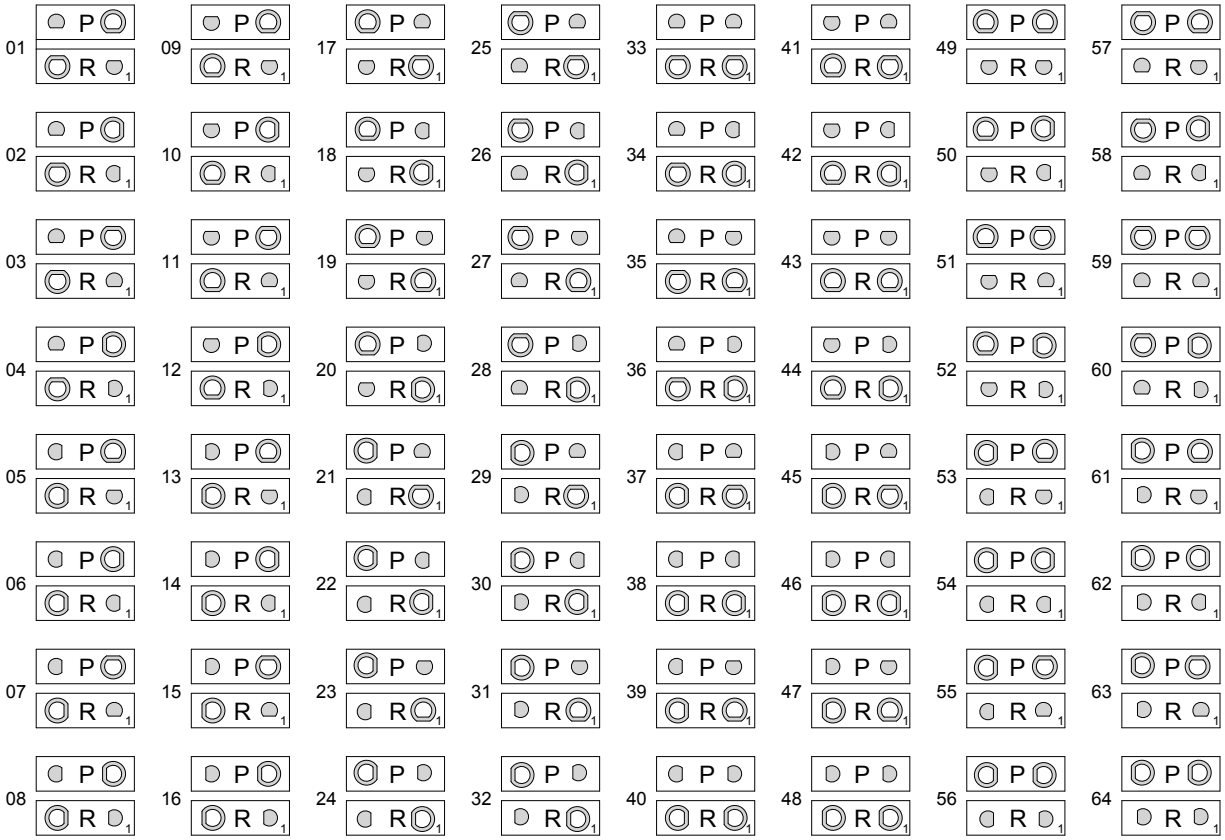


INCON Inc.

5 Flagstone Drive Hudson, New Hampshire 03051
Phone 603-595-0550 Fax 603-595-0555 Email: techsupport@inconconnector.com
Web Address: www.InconConnector.com

# .075 SERIES 3 ROW STRAIGHT PLUG / RECEPTACLE AND RIGHT ANGLE RECEPTACLE

| Dimensions | | | | | |
|---|---|---|---|---|---|
| No. of Cnt's | "A" | "B" | "C" | "D" | "E" |
| 080 | 2.730 | 2.560 | 2.200 | 1.950 | 2.390 |
| 122 | 3.780 | 3.610 | 3.250 | 3.000 | 3.440 |
| 152 | 4.530 | 4.360 | 4.000 | 3.750 | 4.190 |
| 206 | 5.880 | 5.710 | 5.350 | 5.100 | 5.540 |

P/N AXX XXX AXXX AXXX AXX

- AXX — Body Style
- XXX — Number of Contacts
- AXXX — Contact Code see page A12
- AXXX — Hardware Code see page A7-A8
- AXX — Variation see page A20

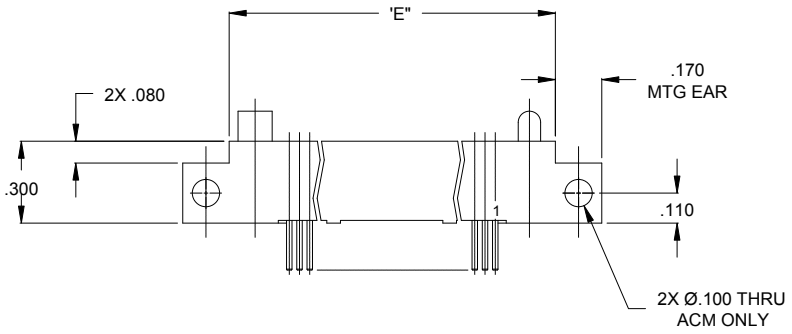


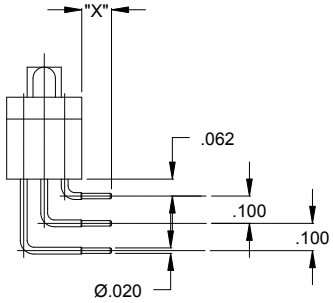


ACP
CARD EXTENDER

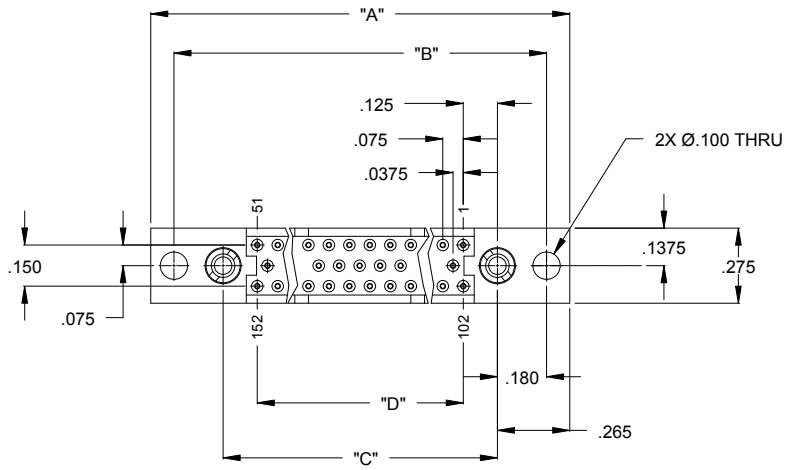


MATING CONNECTORS:

| | | |
|---|---|---|
| RECEPTACLE | AAA - AS SHOWN WITH MTG EARS<br>ACA - WITHOUT MTG EARS | AAC, ACC<br>AAB, ACB |
| PLUG | AAC - WITH MTG EARS<br>ACC - WITHOUT MTG EARS | AAA, ACA<br>ACP, ABM |
| RIGHT ANGLE RECEPTACLE | ACP - WITH RIGHT MTG EARS<br>ACM - WITH RIGHT MTG HOLES | AAC, ACC<br>AAB, ACB |

INCON Inc.
5 Flagstone Drive Hudson, New Hampshire 03051
Phone 603-595-0550 Fax 603-595-0555 Email: techsupport@inconconnector.com
Web Address: www.InconConnector.com

# .075 SERIES 3 ROW RIGHT ANGLE RECEPTACLE
# LOW PROFILE

P/N ABM 122 AXXX AXXX AXX

- ABM — Body Style
- 122 — Number of Contacts
- AXXX — Contact Code see page A12
- AXXX — Hardware Code see page A7-A8
- AXX — Variation see page A20

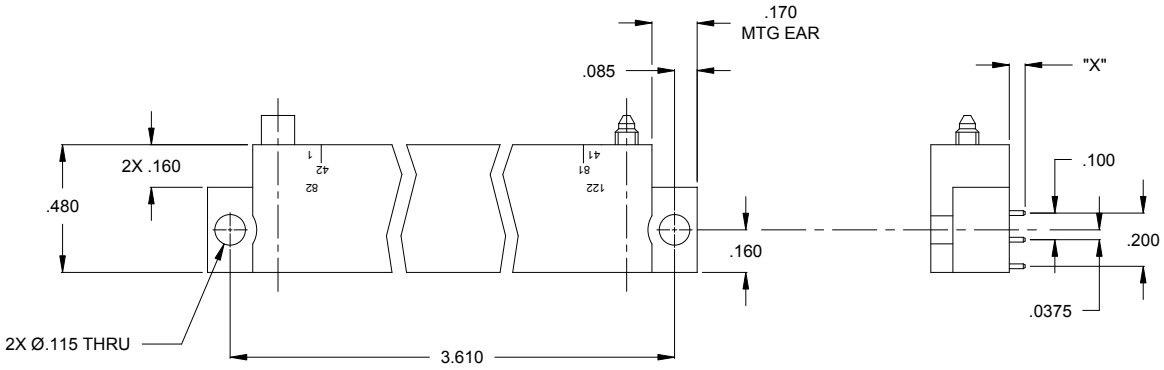


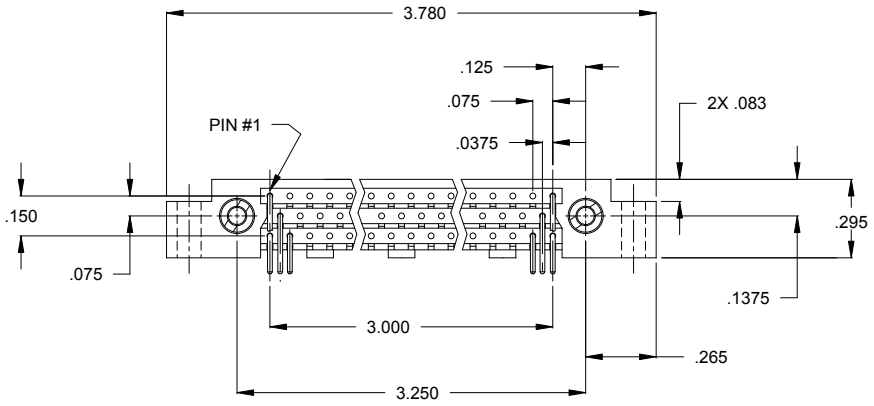


ABM - AS SHOWN WITH MTG EARS

MATING CONNECTORS:

AAC, ACC
AAB, ACB

INCON Inc.
5 Flagstone Drive Hudson, New Hampshire 03051
Phone 603-595-0550 Fax 603-595-0555 Email: techsupport@inconconnector.com
Web Address: www.InconConnector.com

# .075 SERIES 3 ROW RIGHT ANGLE PLUG

| Dimensions | | | | | |
|---|---|---|---|---|---|
| No. of Cnt's | "A" | "B" | "C" | "D" | "E" |
| 080 | 2.730 | 2.560 | 2.200 | 1.950 | 2.390 |
| 122 | 3.780 | 3.610 | 3.250 | 3.000 | 3.440 |
| 152 | 4.530 | 4.360 | 4.000 | 3.750 | 4.190 |
| 206 | 5.880 | 5.710 | 5.350 | 5.100 | 5.540 |

P/N AXX XXX AXXX AXXX AXX

- Body Style
- Number of Contacts
- Contact Code see page A12
- Hardware Code see page A7-A8
- Variation see page A20

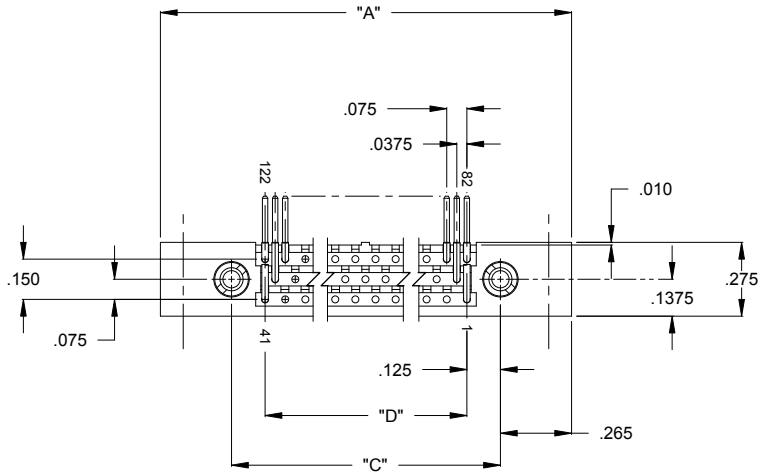


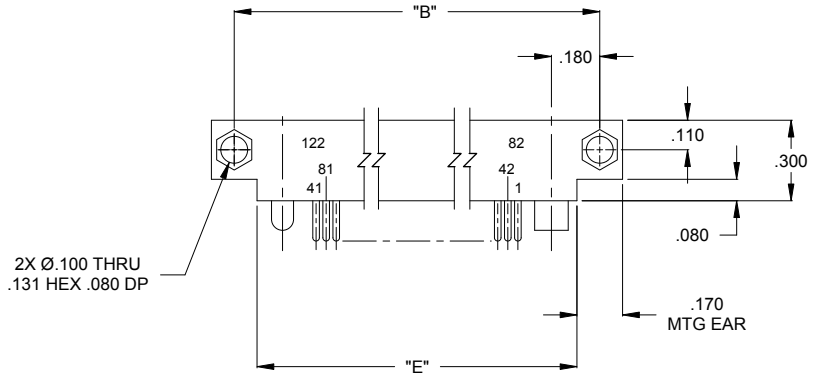


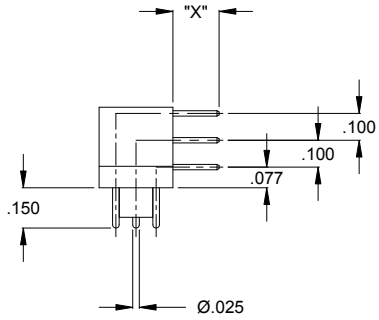


AAB - AS SHOWN WITH MTG EARS

ACB - WITHOUT MTG EARS

MATING CONNECTORS:

AAA, ACA
ACP, ABM


INCON Inc.

5 Flagstone Drive Hudson, New Hampshire 03051
Phone 603-595-0550 Fax 603-595-0555 Email: techsupport@inconconnector.com
Web Address: www.InconConnector.com

# .075 SERIES 3 ROW CONTACT CODES

## RECEPTACLE

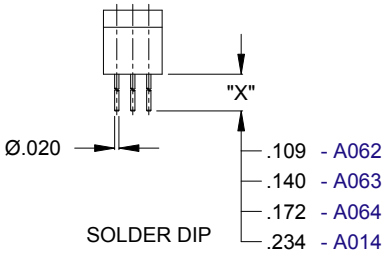


SOLDER DIP

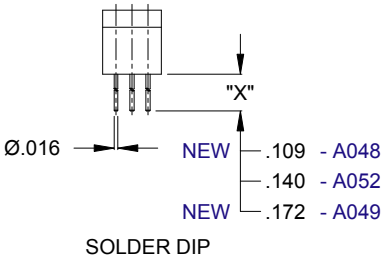


SOLDER DIP

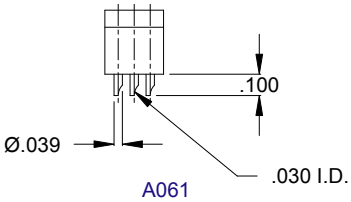


A061

SOLDER CUP

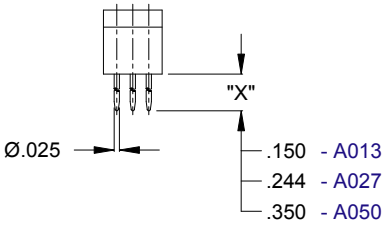


PLUG TERMINATION

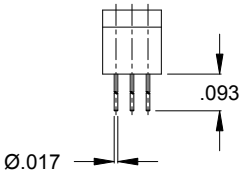


A065

FLEX TERMINATION

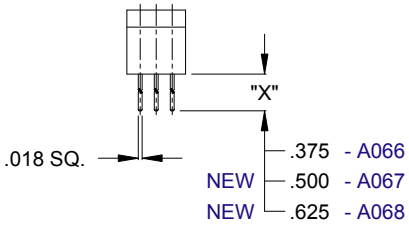


WIRE WRAP

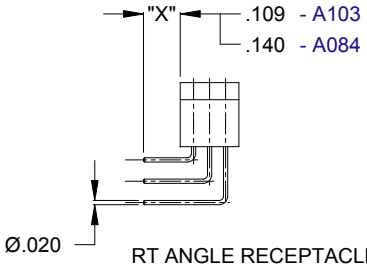


RT ANGLE RECEPTACLE
SOLDER DIP

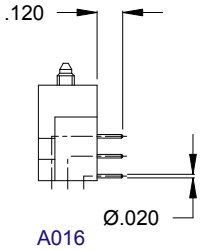


A016

SOLDER DIP

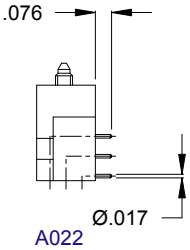


A022

FLEX TERMINATION

## PLUG

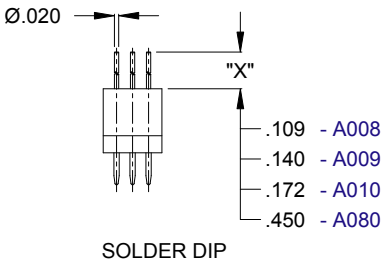


SOLDER DIP

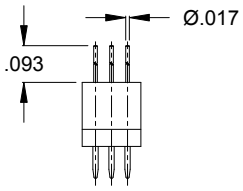


A083

FLEX TERMINATION

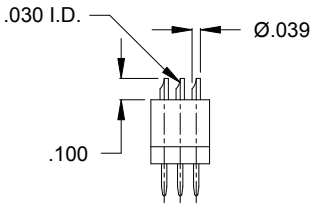


A011

SOLDER CUP

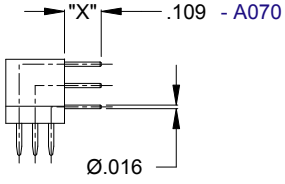


RT ANGLE PLUG
FLEX TERMINATION

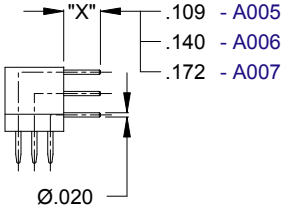


RT ANGLE PLUG
SOLDER DIP

INCON Inc.
5 Flagstone Drive Hudson, New Hampshire 03051
Phone 603-595-0550 Fax 603-595-0555 Email: techsupport@inconconnector.com
Web Address: www.InconConnector.com

# .075 SERIES 4 ROW STRAIGHT PLUG / RECEPTACLE

P/N AXX 210 AXXX AXXX AXX

- AXX — Body Style
- 210 — Number of Contacts
- AXXX — Contact Code see page A17
- AXXX — Hardware Code see page A8 & A18
- AXX — Variation see page A20

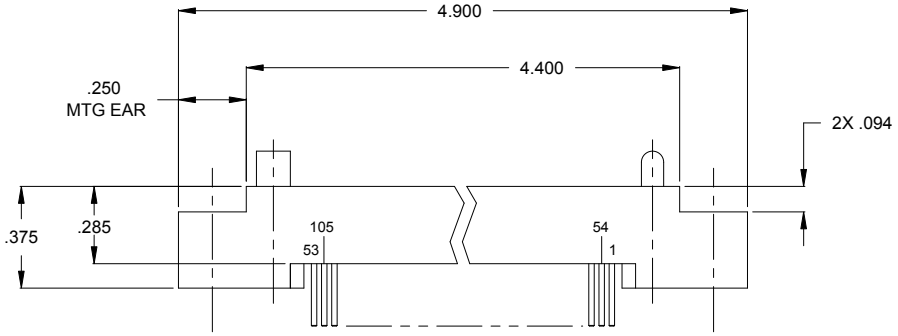


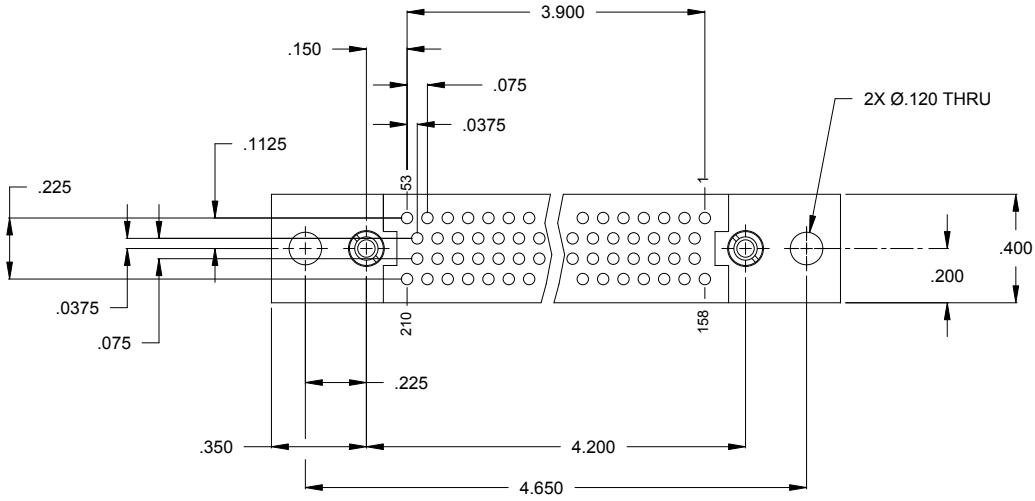


MATING CONNECTORS:

| | | |
|---|---|---|
| RECEPTACLE | AAH - AS SHOWN WITH MTG EARS<br>ACH - WITHOUT MTG EARS | AAJ, ACJ<br>AAK, ACK |
| PLUG | AAK - WITH MTG EARS<br>ACK - WITHOUT MTG EARS | AAH, ACH<br>ACL, ACU |

INCON Inc.
5 Flagstone Drive Hudson, New Hampshire 03051
Phone 603-595-0550 Fax 603-595-0555 Email: techsupport@inconconnector.com
Web Address: www.InconConnector.com

# .075 SERIES 4 ROW RIGHT ANGLE PLUG

P/N AXX 210 AXXX AXXX AXX

- AXX — Body Style
- 210 — Number of Contacts
- AXXX — Contact Code
- AXXX — Hardware Code see page A8 & A18
- AXX — Variation see page A20

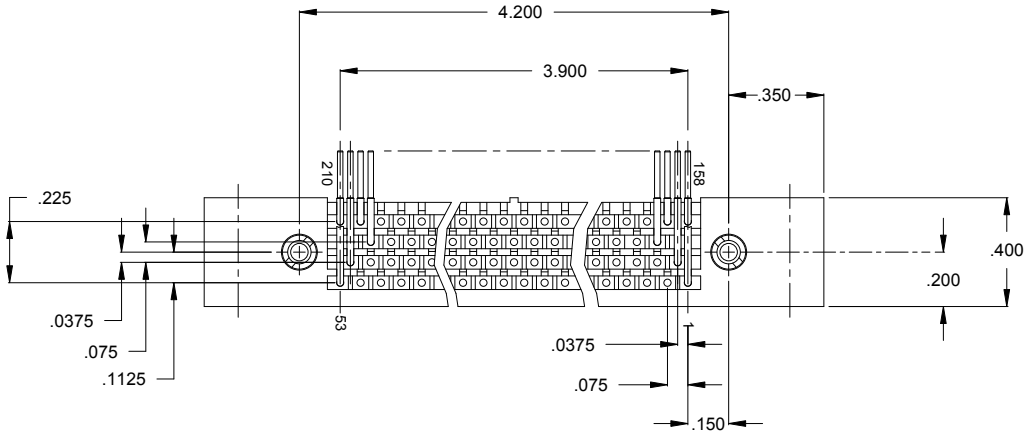


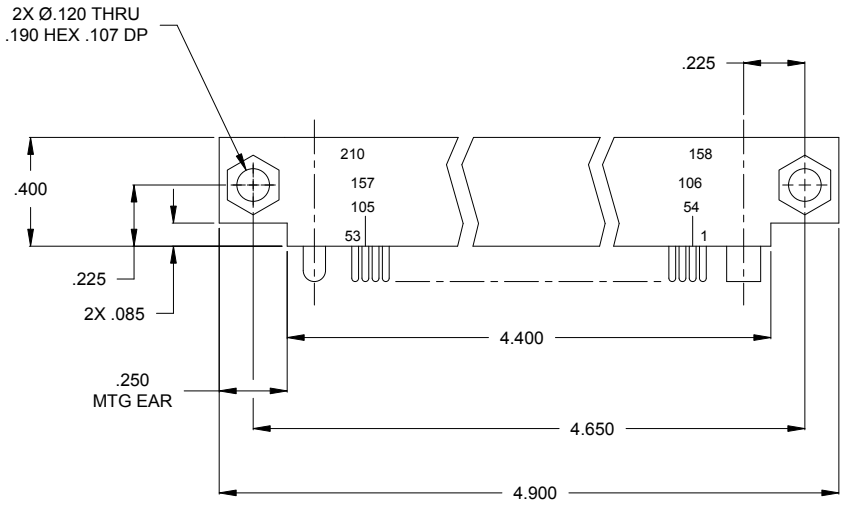


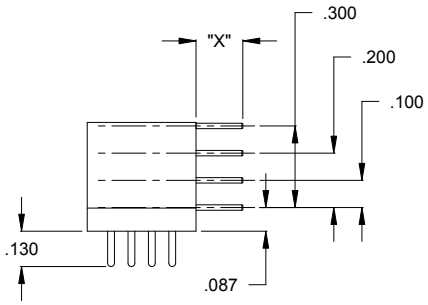


AAJ - AS SHOWN WITH MTG EARS

ACJ - WITHOUT MTG EARS

MATING CONNECTORS:

AAH, ACH
ACL, ACU

INCON Inc.

5 Flagstone Drive Hudson, New Hampshire 03051
Phone 603-595-0550 Fax 603-595-0555 Email: techsupport@inconconnector.com
Web Address: www.InconConnector.com

# .075 SERIES 4 ROW RIGHT ANGLE RECEPTACLE

P/N ACL 210 A099 AXXX AXX

- ACL — Body Style
- 210 — Number of Contacts
- A099 — Contact Code
- AXXX — Hardware Code see page A8 & A18
- AXX — Variation see page A20

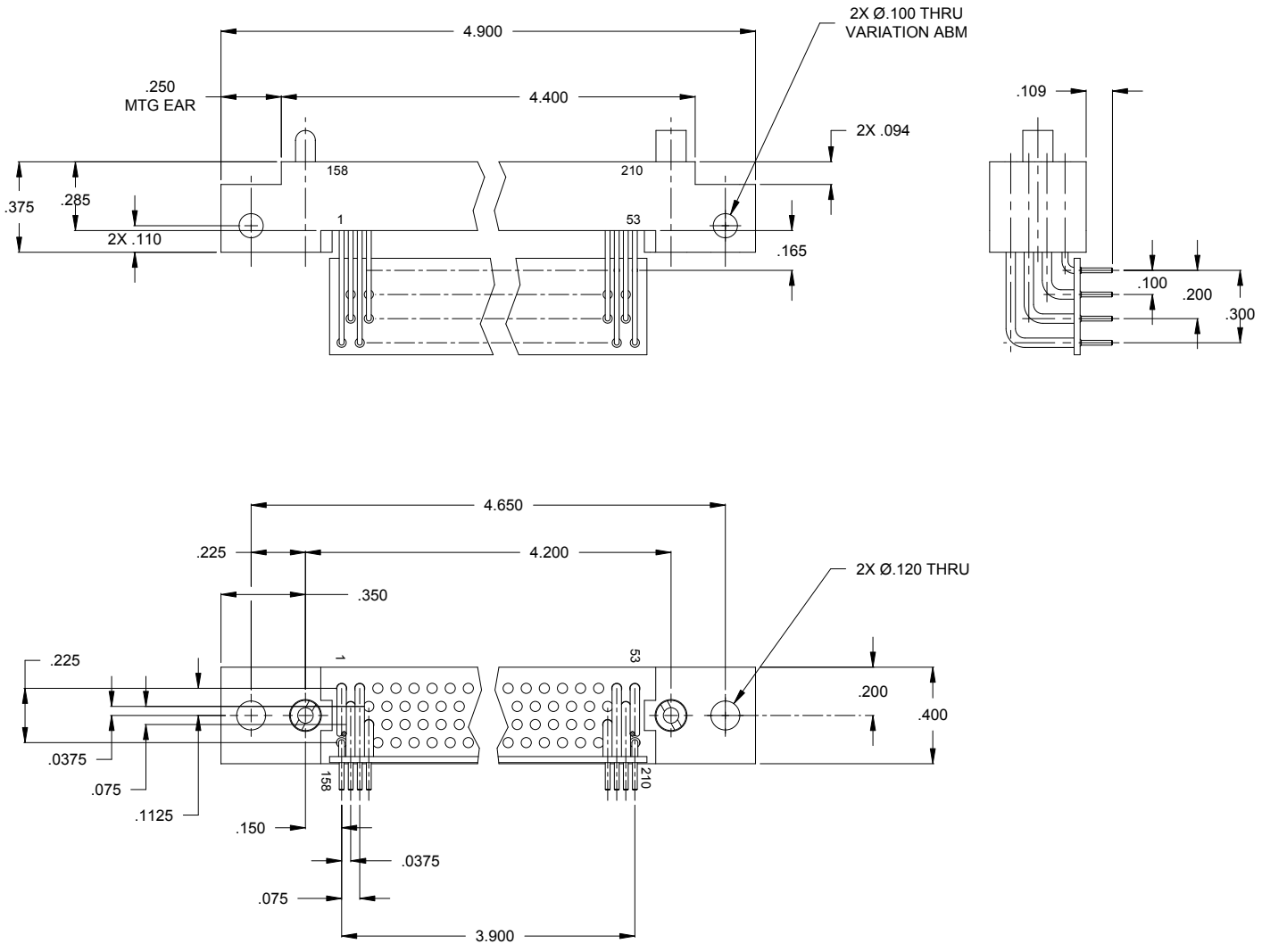


ACL - AS SHOWN WITH MTG EARS

MATING CONNECTORS:

| |
|---|
| AAJ, AAK |
| ACJ, ACK |


INCON Inc.

5 Flagstone Drive Hudson, New Hampshire 03051
Phone 603-595-0550 Fax 603-595-0555 Email: techsupport@inconconnector.com
Web Address: www.InconConnector.com

# .075 SERIES 4 ROW RIGHT ANGLE RECEPTACLE

P/N ACU 210 A099 AXXX AXX

- ACU — Body Style
- 210 — Number of Contacts
- A099 — Contact Code
- AXXX — Hardware Code (see page A8 & A18)
- AXX — Variation (see page A20)

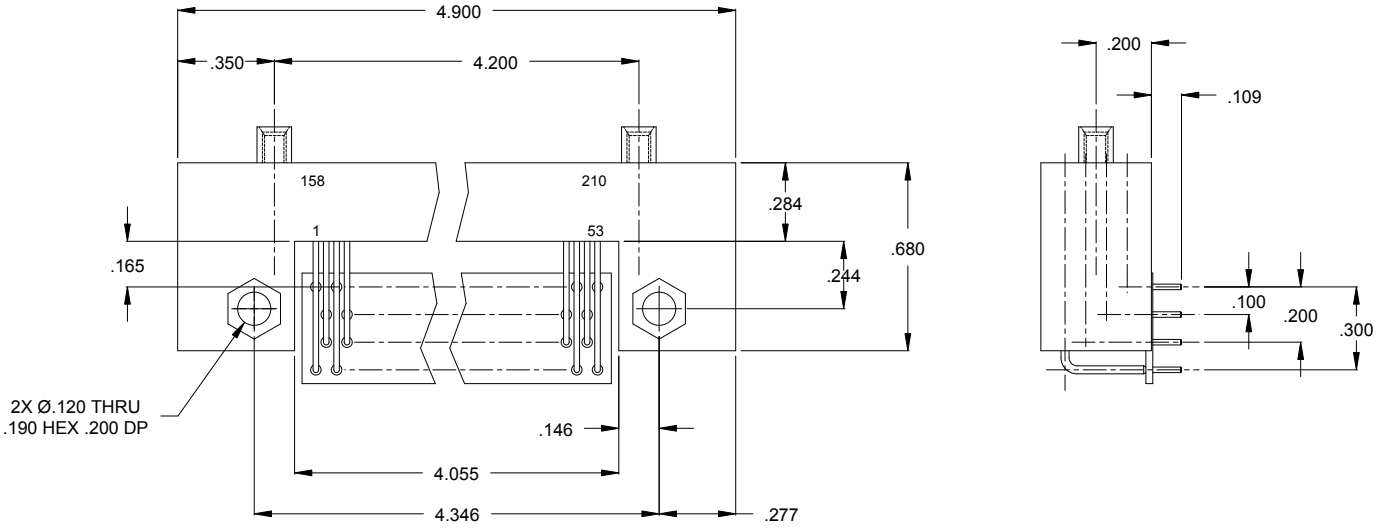


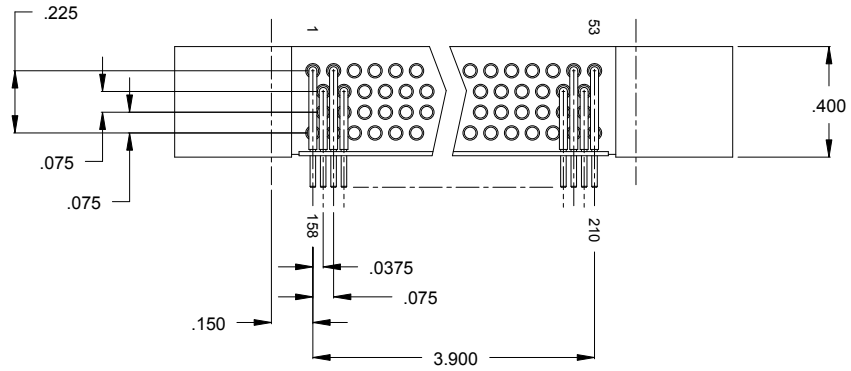


MATING CONNECTORS:

ACU - AS SHOWN WITH SPECIAL MTG EARS

AAJ, AAK
ACJ, ACK

INCON Inc.

5 Flagstone Drive Hudson, New Hampshire 03051
Phone 603-595-0550 Fax 603-595-0555 Email: techsupport@inconconnector.com
Web Address: www.InconConnector.com

# .075 SERIES 4 ROW CONTACT CODES

## RECEPTACLE

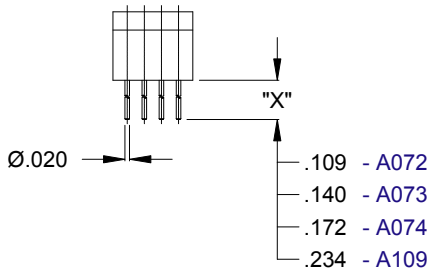


SOLDER DIP

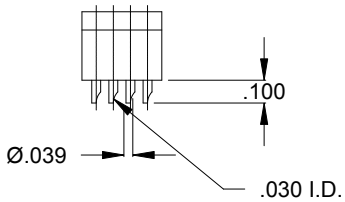


A071

SOLDER CUP

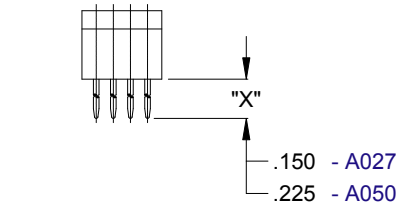


PLUG TERMINATION

## PLUG

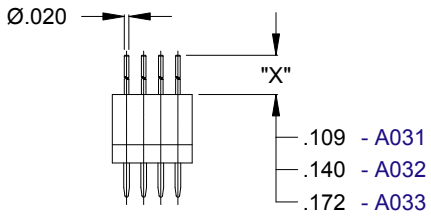


SOLDER DIP

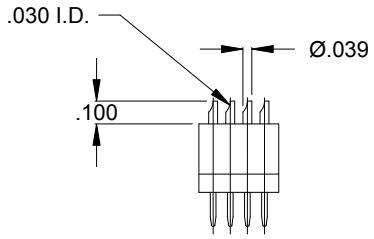


A085

SOLDER CUP

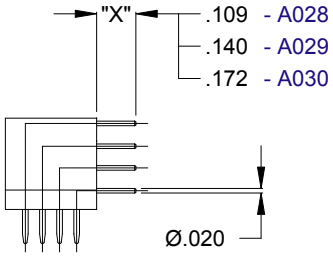


RT ANGLE PLUG
SOLDER DIP

INCON Inc.
5 Flagstone Drive Hudson, New Hampshire 03051
Phone 603-595-0550 Fax 603-595-0555 Email: techsupport@inconconnector.com
Web Address: www.InconConnector.com

# .075 SERIES 4 ROW HARDWARE CODES

## GUIDE SETS

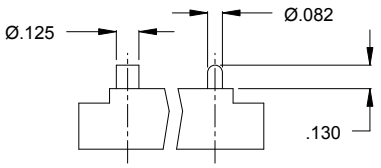


A006 - GUIDE SET
FIGURE #1

| CODE | FIGURE NO. | HARDWARE DESCRIPTION |
|---|---|---|
| A000 | | NO HARDWARE |
| A006 | 1 | GUIDE SET |
| A033 | | TWO GUIDE SOCKETS |
| A034 | | TWO GUIDE PINS |

## FIXED JACKSETS

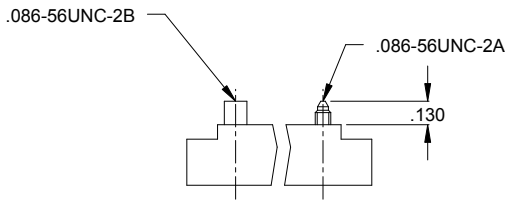


A005 - FIXED JACKSET
FIGURE #1

| CODE | FIGURE NO. | HARDWARE DESCRIPTION |
|---|---|---|
| A000 | | NO HARDWARE |
| A005 | 1 | FIXED JACKSET |
| A018 | | FIXED JACKSET REVERSED |
| A026 | | TWO FIXED JACKSCREWS |
| A027 | | TWO FIXED JACKSOCKETS |

## TURNING HEX JACKSETS

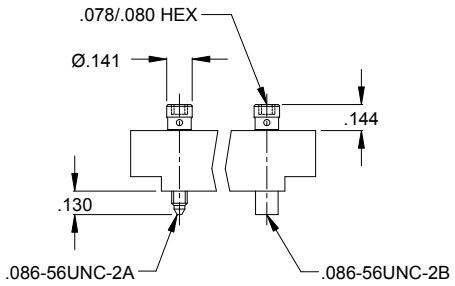


A019 - SHORT TURNING HEX JACKSET
FIGURE #1

| CODE | FIG NO. | HARDWARE DESCRIPTION | KNOB LENGTH |
|---|---|---|---|
| A000 | | NO HARDWARE | |
| A019 | 1 | SHORT TURNING HEX JACKSET | .144 |
| A020 | | SHORT TURNING HEX JACKSET, REVERSED | .144 |

## SLOTTED TURNING JACKSETS

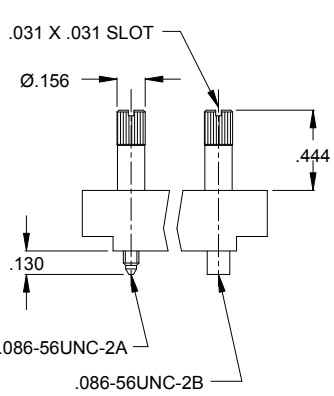


A008 - TURNING SLOTTED JACKSET
FIGURE #1

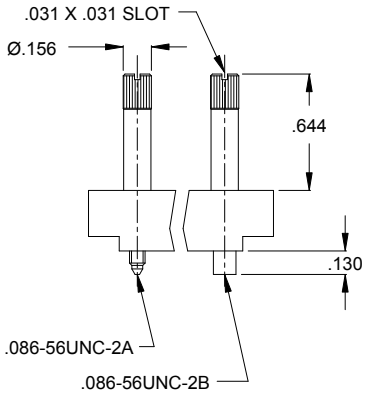


A014 - TURNING SLOTTED JACKSET
FIGURE #2

A021 - TURNING JACKSET
FIGURE #3

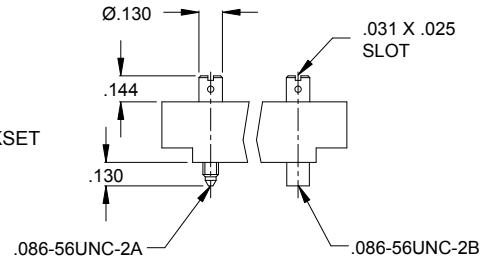


| CODE | FIG NO. | HARDWARE DESCRIPTION | KNOB LENGTH |
|---|---|---|---|
| A000 | | NO HARDWARE | |
| A008 | 1 | TURNING SLOTTED JACKSET | .444 |
| A016 | | TURNING SLOTTED JACKSET, REVERSED | .644 |
| A004 | 2 | TURNING SLOTTED JACKSET | .644 |
| A017 | | TURNING SLOTTED JACKSET, REVERSED | .444 |
| A021 | 3 | TURNING HEX JACKSET | .144 |
| A022 | | TURNING JACKSET, REVERSED | .144 |

INCON Inc.
5 Flagstone Drive Hudson, New Hampshire 03051
Phone 603-595-0550 Fax 603-595-0555 Email: techsupport@inconconnector.com
Web Address: www.InconConnector.com

# .075 SERIES 3 & 4 ROW INTERFACIAL SILICONE RUBBER GASKETS

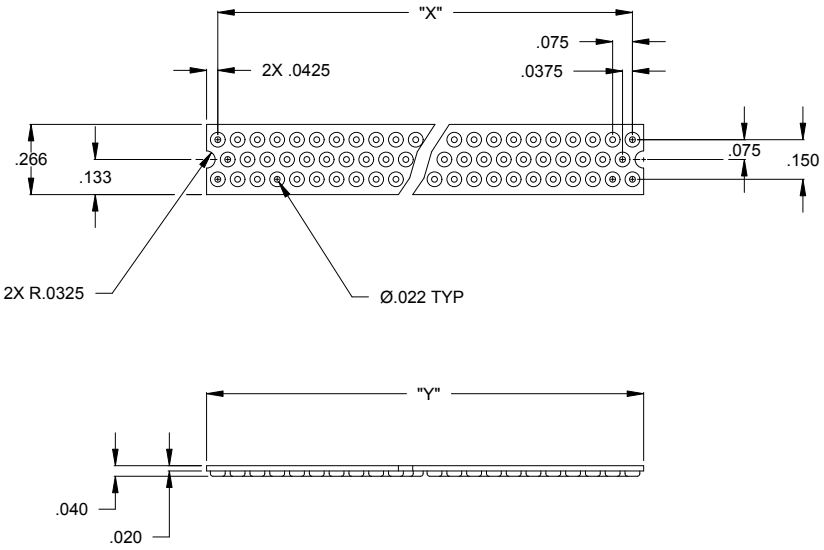


| Dimensions | | | |
|---|---|---|---|
| Part No. | No. of Cnt's | "X" REF | "Y" |
| R3018-80 | 080 | 1.950 | 2.035 |
| R3018-122 | 122 | 3.000 | 3.085 |
| R3018-152 | 152 | 3.750 | 3.835 |

USED WITH CONNECTORS:

AAC, ACC, AAA
ACA, ABM

R3018 - 3 ROW GASKET

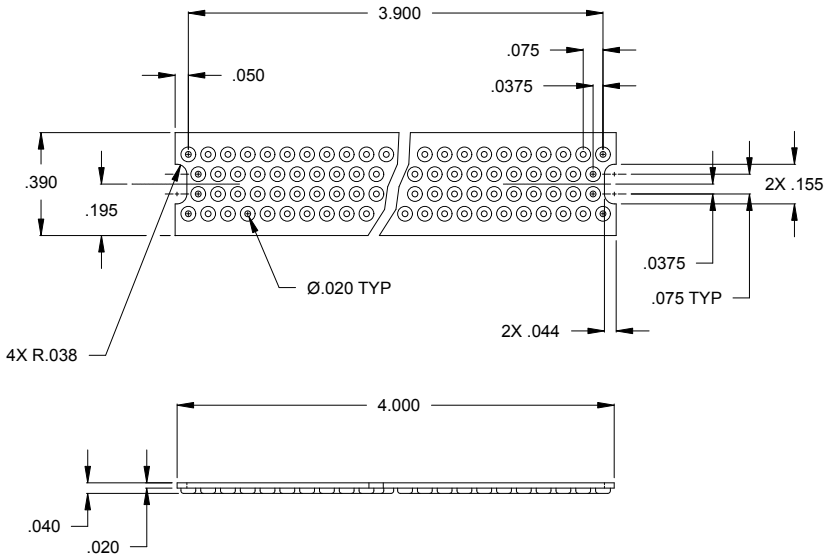


USED WITH CONNECTORS:

AAJ, ACJ

R3019 - 4 ROW GASKET

*GASKET MATERIAL: SILICONE RUBBER PER ZZ-R-765, NATURAL, CLASS 1B, GRADE 50.*

INCON Inc.
5 Flagstone Drive Hudson, New Hampshire 03051
Phone 603-595-0550 Fax 603-595-0555 Email: techsupport@inconconnector.com
Web Address: www.InconConnector.com

# Variations

## "F" Series .075" ℄

| Variation | Description |
|---|---|
| A000 | No Variation |
| AAA | Solder Dip Terminations |
| AAE | Epoxy Hex Nuts |
| ACW | Epoxy Hex Nuts and Solder Dip Terminations |
| ACR | Reverse Marking |
| ACC | Reverse Marking and Solder Dip Terminations |
| ACP | Bag Hardware |
| ACB | Bag Hardware and Solder Dip Terminations |

**Consult Factory for Special Variations**

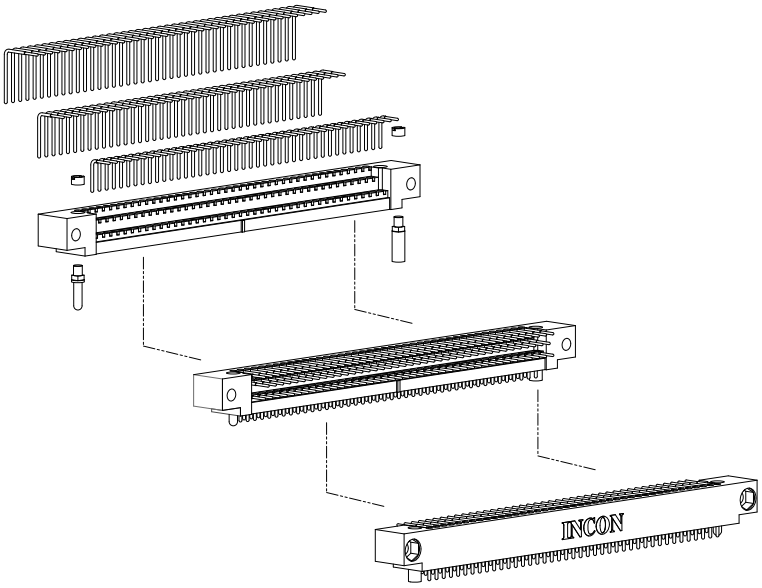

M55302/190

| MILITARY PART NUMBER | INCON PART NUMBER |
|---|---|
| M55302/190LA100X | AAD100A061A003A00 |
| M55302/190LA100Y | AAD100A061R201A00 |
| M55302/190LA100Y (-**) | AAD100A061R2**A00 |
| M55302/190LA100F | AAD100A061A010A00 |
| M55302/190LA100S | AAD100A061A009A00 |
| M55302/190LA100N | AAD100A061A014A00 |
| M55302/190LA100L | AAD100A061A011A00 |
| M55302/190LA100M | AAD100A061A001A00 |
| M55302/190LB100X | AAD100A062A003A00 |
| M55302/190LB100Y | AAD100A062R201A00 |
| M55302/190LB100Y (-**) | AAD100A062R2**A00 |
| M55302/190LB100F | AAD100A062A010A00 |
| M55302/190LB100S | AAD100A062A009A00 |
| M55302/190LB100N | AAD100A062A014A00 |
| M55302/190LB100L | AAD100A062A011A00 |
| M55302/190LB100M | AAD100A062A001A00 |
| M55302/190LC100X | AAD100A063A003A00 |
| M55302/190LC100Y | AAD100A063R201A00 |
| M55302/190LC100Y (-**) | AAD100A063R2**A00 |
| M55302/190LC100F | AAD100A063A010A00 |
| M55302/190LC100S | AAD100A063A009A00 |
| M55302/190LC100N | AAD100A063A014A00 |
| M55302/190LC100L | AAD100A063A011A00 |
| M55302/190LC100M | AAD100A063A001A00 |
| M55302/190LD100X | AAD100A064A003A00 |
| M55302/190LD100Y | AAD100A064R201A00 |
| M55302/190LD100Y (-**) | AAD100A064R2**A00 |
| M55302/190LD100F | AAD100A064A010A00 |
| M55302/190LD100S | AAD100A064A009A00 |
| M55302/190LD100N | AAD100A064A014A00 |
| M55302/190LD100L | AAD100A064A011A00 |
| M55302/190LD100M | AAD100A064A001A00 |
| M55302/190LE100X | AAD100A065A003A00 |
| M55302/190LE100Y | AAD100A065R201A00 |
| M55302/190LE100Y (-**) | AAD100A065R2**A00 |
| M55302/190LE100F | AAD100A065A010A00 |
| M55302/190LE100S | AAD100A065A009A00 |
| M55302/190LE100N | AAD100A065A014A00 |
| M55302/190LE100L | AAD100A065A011A00 |
| M55302/190LE100M | AAD100A065A001A00 |

M55302/191

| MILITARY PART NUMBER | INCON PART NUMBER |
|---|---|
| M55302/191A100X | AAE100A017A003A00 |
| M55302/191A100Y | AAE100A017P201A00 |
| M55302/191A100Y (-**) | AAE100A017P2**A00 |
| M55302/191A100F | AAE100A017A010A00 |
| M55302/191A100S | AAE100A017A009A00 |
| M55302/191A100N | AAE100A017A014A00 |
| M55302/191A100L | AAE100A017A011A00 |
| M55302/191A100M | AAE100A017A001A00 |
| M55302/191B100X | AAE100A018A003A00 |
| M55302/191B100Y | AAE100A018P201A00 |
| M55302/191B100Y (-**) | AAE100A018P2**A00 |
| M55302/191B100F | AAE100A018A010A00 |
| M55302/191B100S | AAE100A018A009A00 |
| M55302/191B100N | AAE100A018A014A00 |
| M55302/191B100L | AAE100A018A011A00 |
| M55302/191B100M | AAE100A018A001A00 |
| M55302/191C100X | AAE100A019A003A00 |
| M55302/191C100Y | AAE100A019P201A00 |
| M55302/191C100Y (-**) | AAE100A019P2**A00 |
| M55302/191C100F | AAE100A019A010A00 |
| M55302/191C100S | AAE100A019A009A00 |
| M55302/191C100N | AAE100A019A014A00 |
| M55302/191C100L | AAE100A019A011A00 |
| M55302/191C100M | AAE100A019A001A00 |

M55302/193

| MILITARY PART NUMBER | INCON PART NUMBER |
|---|---|
| M55302/193A***X | AAB***A005A003A00 |
| M55302/193A***Y | AAB***A005P201A00 |
| M55302/193A***Y (-**) | AAB***A005P2**A00 |
| M55302/193A***F | AAB***A005A010A00 |
| M55302/193A***S | AAB***A005A009A00 |
| M55302/193A***N | AAB***A005A014A00 |
| M55302/193A***L | AAB***A005A011A00 |
| M55302/193A***M | AAB***A005A001A00 |
| M55302/193B***X | AAB***A006A003A00 |
| M55302/193BZ***X | AAB***A006P201A00 |
| M55302/193B***Y(-**) | AAB***A006P2**A00 |
| M55302/193B***F | AAB***A006A010A00 |
| M55302/193B***S | AAB***A006A009A00 |
| M55302/193B***N | AAB***A006A014A00 |
| M55302/193B***L | AAB***A006A011A00 |
| M55302/193B***M | AAB***A006A001A00 |
| M55302/193C***X | AAB***A007A003A00 |
| M55302/193C***Y | AAB***A007P201A00 |
| M55302/193C***Y(-**) | AAB***A007P2**A00 |
| M55302/193C***F | AAB***A007A010A00 |
| M55302/193C***S | AAB***A007A009A00 |
| M55302/193C***N | AAB***A007A014A00 |
| M55302/193C***L | AAB***A007A011A00 |
| M55302/193C***M | AAB***A007A001A00 |

M55302/192

| MILITARY PART NUMBER | INCON PART NUMBER |
|---|---|
| M55302/192LA***X | AAA***A061A003A00 |
| M55302/192LA***Y | AAA***A061R201A00 |
| M55302/192LA***Y (-**) | AAA***A061R2**A00 |
| M55302/192LA***F | AAA***A061A010A00 |
| M55302/192LA***S | AAA***A061A009A00 |
| M55302/192LA***N | AAA***A061A014A00 |
| M55302/192LA***L | AAA***A061A011A00 |
| M55302/192LA***M | AAA***A061A001A00 |
| M55302/192LB***X | AAA***A062A003A00 |
| M55302/192LB***Y | AAA***A062R201A00 |
| M55302/192LB***Y (-**) | AAA***A062R2**A00 |
| M55302/192LB***F | AAA***A062A010A00 |
| M55302/192LB***S | AAA***A062A009A00 |
| M55302/192LB***N | AAA***A062A014A00 |
| M55302/192LB***L | AAA***A062A011A00 |
| M55302/192LB***M | AAA***A062A001A00 |
| M55302/192LC***X | AAA***A063A003A00 |
| M55302/192LC***Y | AAA***A063R201A00 |
| M55302/192LC***Y (-**) | AAA***A063R2**A00 |
| M55302/192LC***F | AAA***A063A010A00 |
| M55302/192LC***S | AAA***A063A009A00 |
| M55302/192LC***N | AAA***A063A014A00 |
| M55302/192LC***L | AAA***A063A011A00 |
| M55302/192LC***M | AAA***A063A001A00 |
| M55302/192LD***X | AAA***A064A003A00 |
| M55302/192LD***Y | AAA***A064R201A00 |
| M55302/192LD***Y (-**) | AAA***A064R2**A00 |
| M55302/192LD***F | AAA***A064A010A00 |
| M55302/192LD***S | AAA***A064A009A00 |
| M55302/192LD***N | AAA***A064A014A00 |
| M55302/192LD***L | AAA***A064A011A00 |
| M55302/192LD***M | AAA***A064A001A00 |
| M55302/192LE***X | AAA***A065A003A00 |
| M55302/192LE***Y | AAA***A065R201A00 |
| M55302/192LE***Y (-**) | AAA***A065R2**A00 |
| M55302/192LE***F | AAA***A065A010A00 |
| M55302/192LE***S | AAA***A065A009A00 |
| M55302/192LE***N | AAA***A065A014A00 |
| M55302/192LE***L | AAA***A065A011A00 |
| M55302/192LE***M | AAA***A065A001A00 |

# MIL-C-55302 Cross Reference

NOTES: "**" INDICATES THE POLARIZATION FROM 00 THROUGH 64

*** INDICATES NUMBER OF POSITIONS


# INCON Inc.

5 Flagstone Drive Hudson, New Hampshire 03051
Phone 603-595-0550 Fax 603-595-0555
Web Address: www.InconConnector.com
Email: techsupport@inconconnector.com